Liberty

Model # 5836

Lamp Post with Mount

4 LLDPE | UV | 18 lbs | MADE IN USA

DESCRIPTION

Guide your footsteps to the entrance of your home with our Liberty Lamp Post. Our low maintenance polyethylene lamp posts are a great solution to your residential lighting needs.

- Weather resistant, low maintenance material
- Includes 6ft decorative sleeve and steel ground mount post
- Lamp post also sold without steel ground mount *(Model # 5838)*
- 100% high-grade polyethylene with built in UV inhibitors
- Warranty: 15-Yr Residential Use / 5-Yr Commercial Use

PRODUCT DIMENSIONS

Overall Dimensions: 9.4in L x 9.4in W x 89in H (23.8cm x 23.8m x 226.1cm)
Sleeve Dimensions: 9.4in L x 9.4in W x 72in H (23.8cm x 23.8m x 182.9cm)
Steel Post: 3in DIA x 89in H (7.6cm x 226.1cm)
Wall Thickness: 0.125in (3.17mm)
Part Weight: 18lbs (8.2kg)
Material: Polyethylene
Note: Light fixture and wiring materials not included

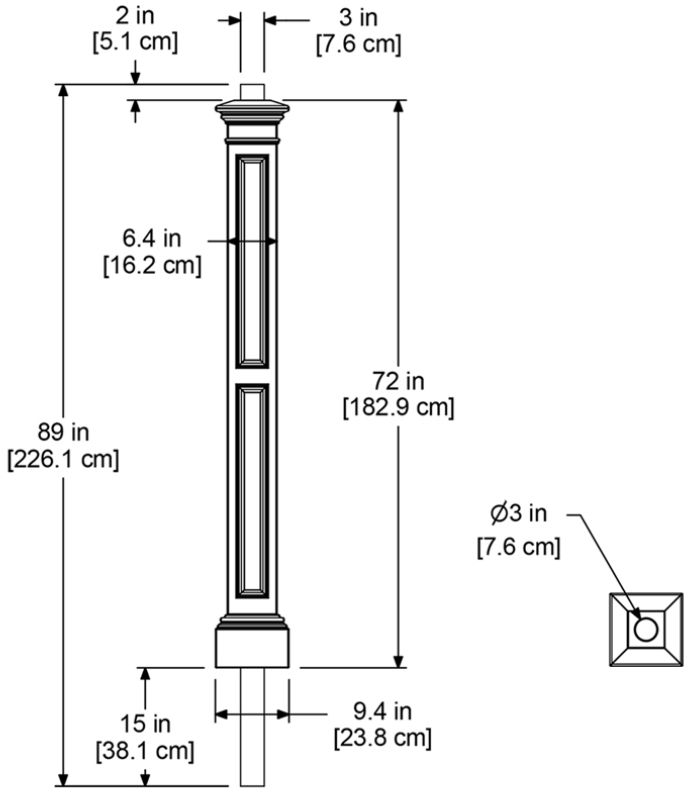

MAYNE®
Outdoor Products *of* Distinction

7024 Kilbourne Rd - Unit A London, ON N6P 1K6
Tel: 866-363-8834 | www.gomayne.com
customerservice@gomayne.com